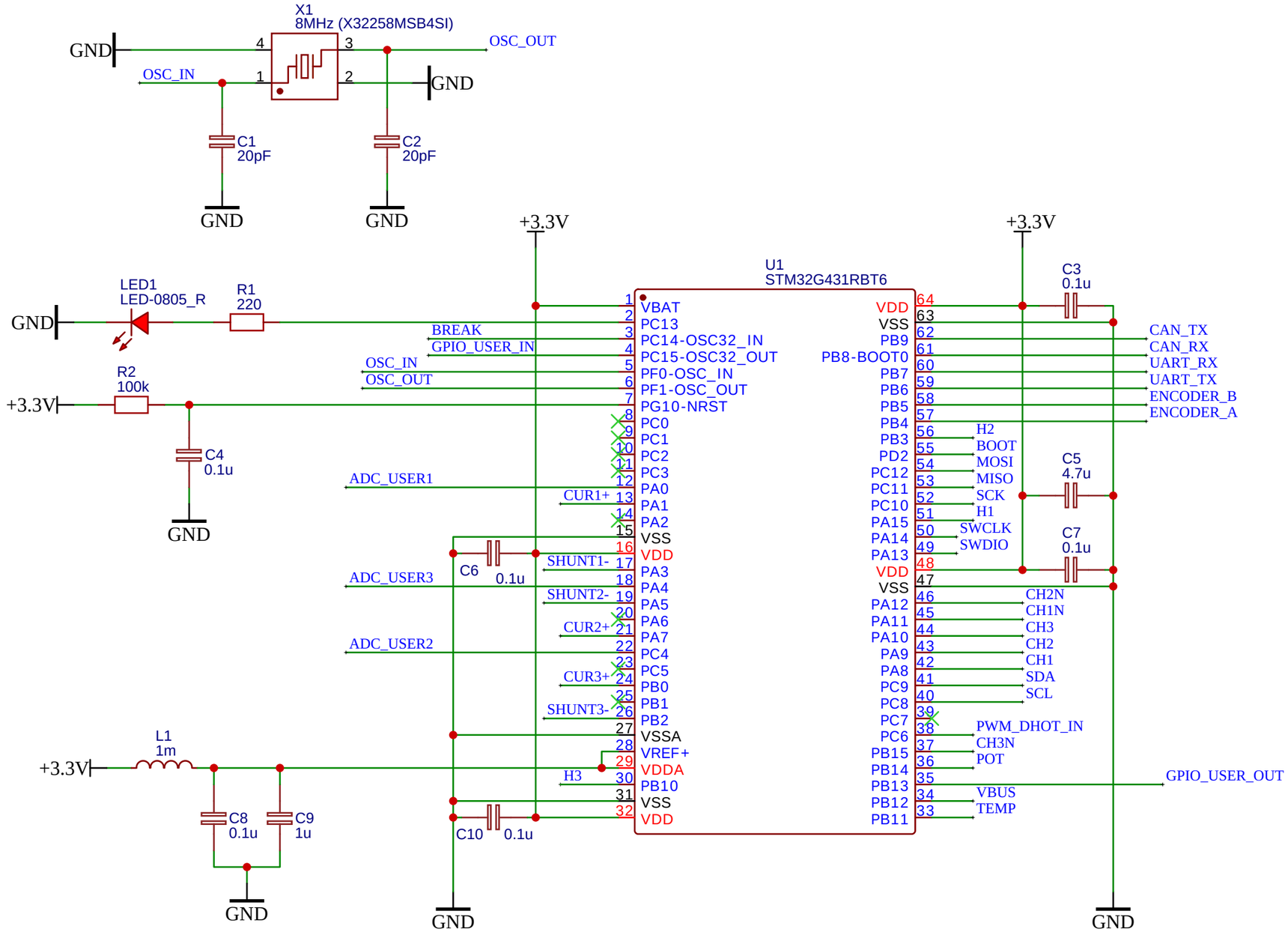

TITLE: MCU	REV: 1.0
EasyEDA	Company: blog.avislab.com
	Sheet: 1/1
	Date: 2026-09-09 Drawn By: andrkoryagin

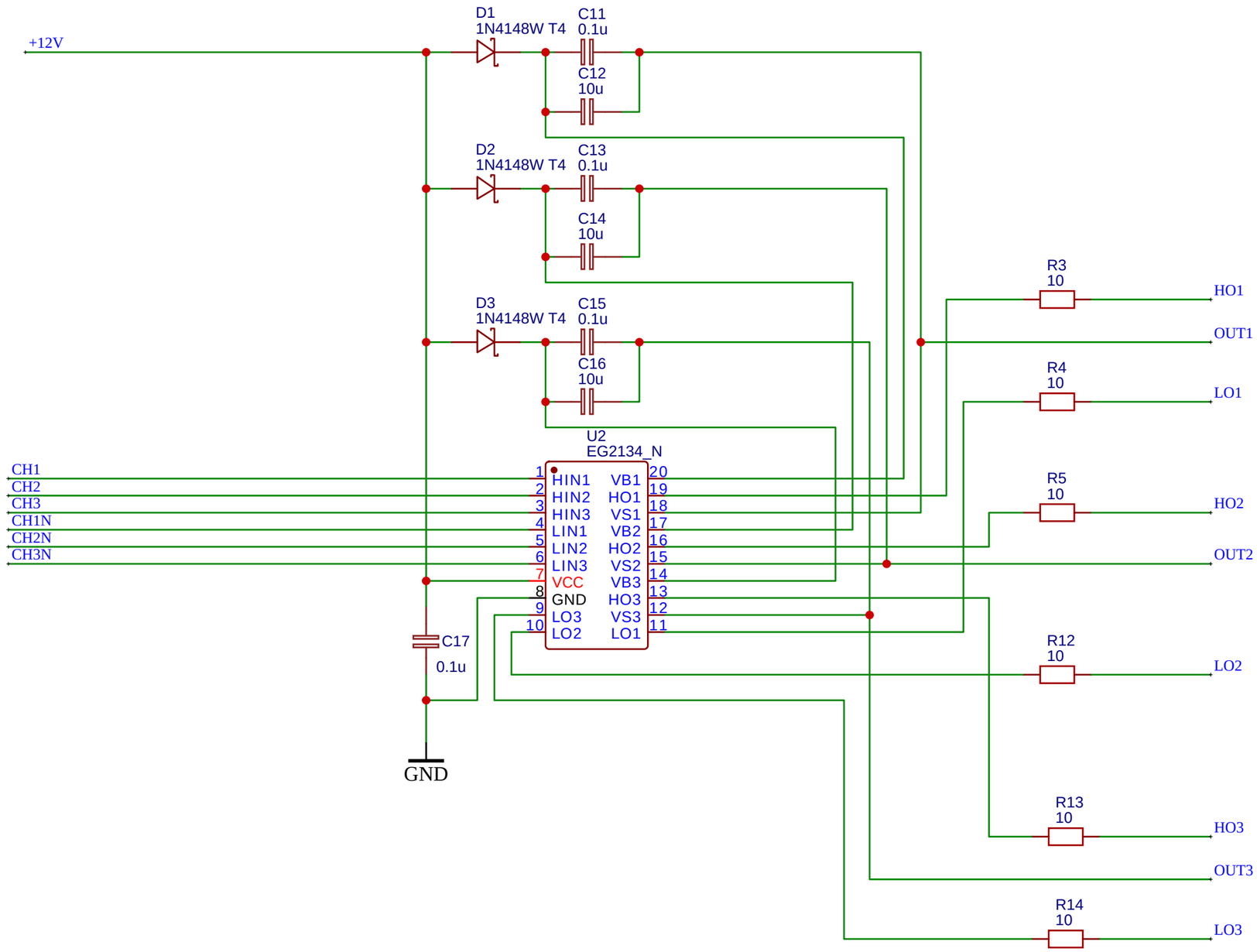

TITLE: Driver		REV: 1.0
EasyEDA	Company: blog.avislab.com	Sheet: 1/1
	Date: 2026-09-09 Drawn By: andrkoryagin	

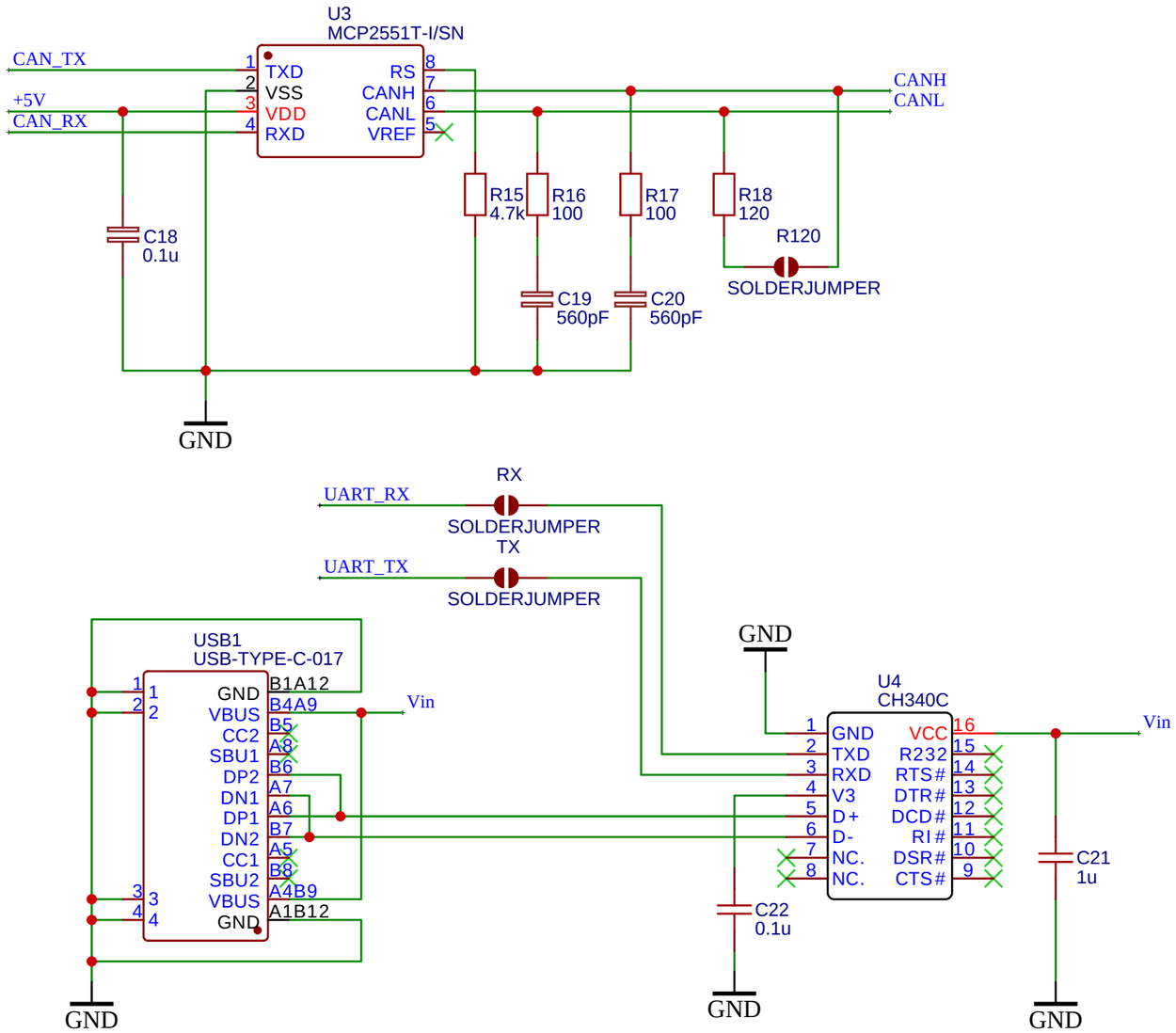

TITLE: Interfaces	REV: 1.0
EasyEDA Company: blog.avislab.com	Sheet: 1/1
Date: 2026-09-09 Drawn By: andrkoryagin	

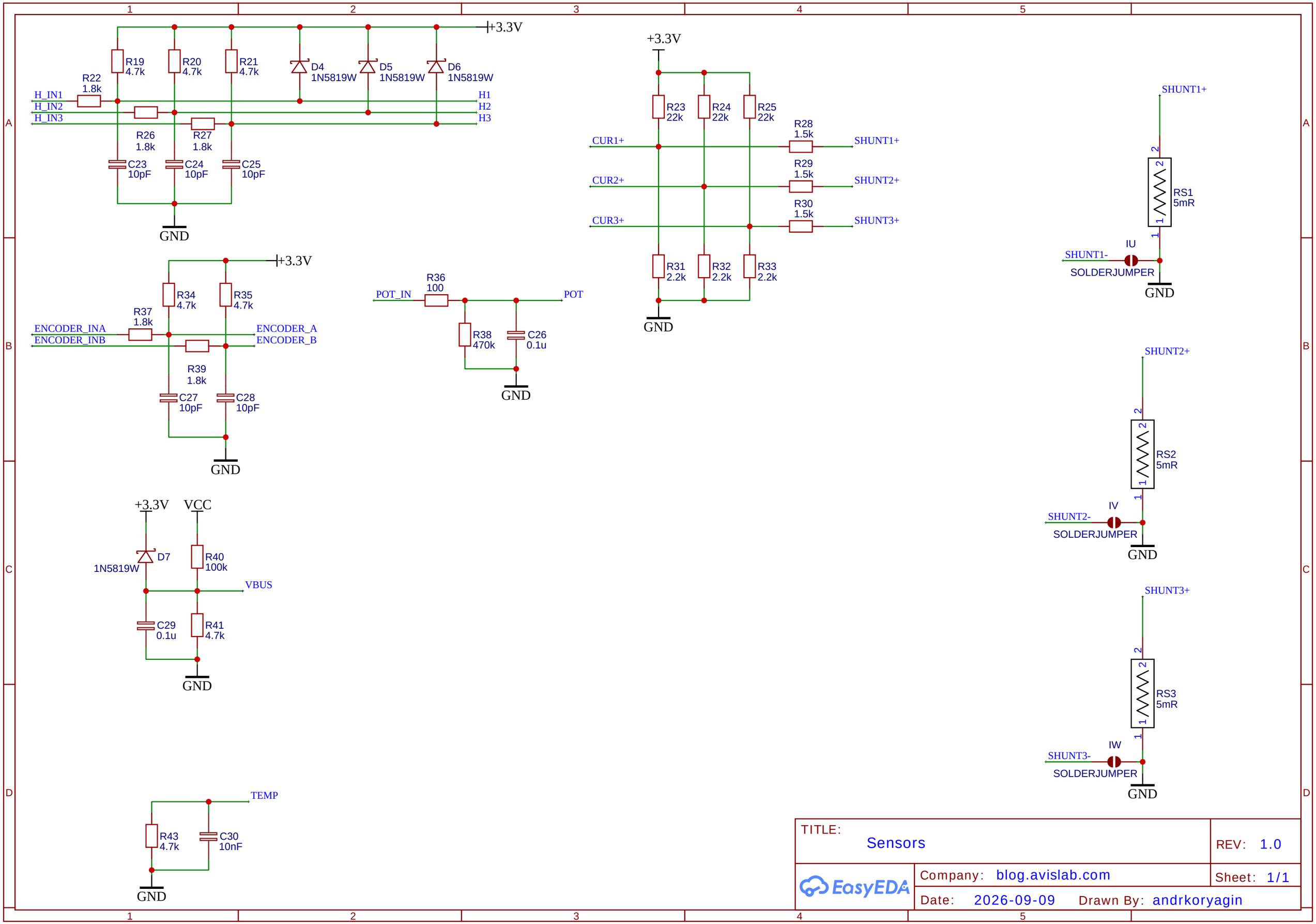

TITLE: Sensors		REV: 1.0
EasyEDA	Company: blog.avislab.com	Sheet: 1/1
	Date: 2026-09-09 Drawn By: andrkoryagin	

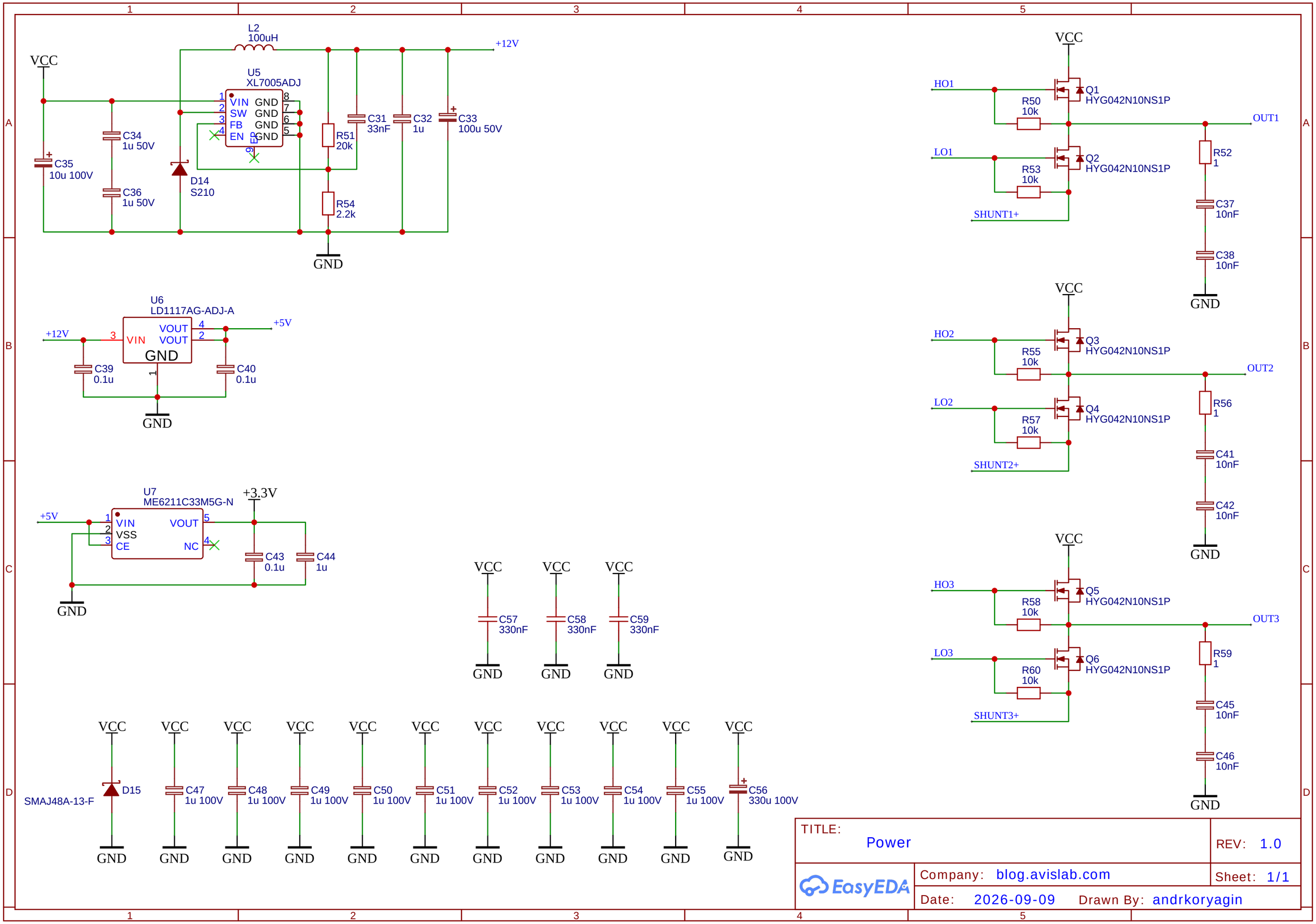
L2
100uH
+12V
VCC
U5
XL7005ADJ
VIN
SW
FB
EN
GND
GND
GND
GND
C34
1u 50V
C35
10u 100V
C36
1u 50V
D14
S210
R51
20k
R54
2.2k
C31
33nF
C32
1u
C33
100u 50V
GND
U6
LD1117AG-ADJ-A
+12V
VIN
VOUT
VOUT
GND
+5V
C39
0.1u
C40
0.1u
GND
U7
ME6211C33M5G-N
+3.3V
+5V
VIN
VSS
CE
VOUT
NC
C43
0.1u
C44
1u
GND
VCC
C57
330nF
C58
330nF
C59
330nF
GND
D15
SMAJ48A-13-F
C47
1u 100V
C48
1u 100V
C49
1u 100V
C50
1u 100V
C51
1u 100V
C52
1u 100V
C53
1u 100V
C54
1u 100V
C55
1u 100V
C56
330u 100V
HO1
LO1
SHUNT1+
Q1
HYG042N10NS1P
Q2
HYG042N10NS1P
R50
10k
R53
10k
OUT1
R52
1
C37
10nF
C38
10nF
HO2
LO2
SHUNT2+
Q3
HYG042N10NS1P
Q4
HYG042N10NS1P
R55
10k
R57
10k
OUT2
R56
1
C41
10nF
C42
10nF
HO3
LO3
SHUNT3+
Q5
HYG042N10NS1P
Q6
HYG042N10NS1P
R58
10k
R60
10k
OUT3
R59
1
C45
10nF
C46
10nF
TITLE:
Power
REV: 1.0
Company: blog.avislab.com
Sheet: 1/1
Date: 2026-09-09
Drawn By: andrkoryagin
EasyEDA

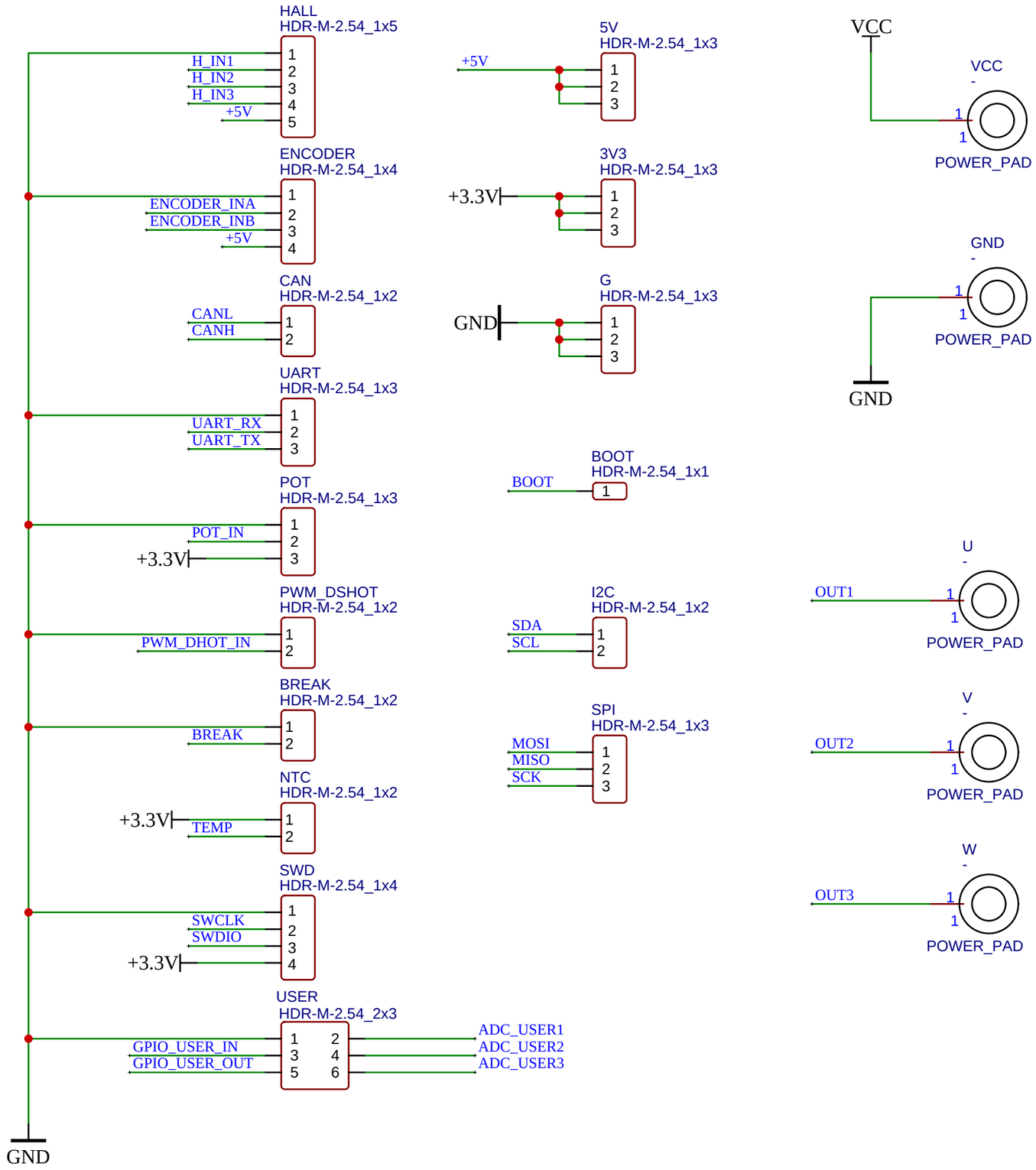

TITLE: Connectors	REV: 1.0
EasyEDA	Company: blog.avislab.com / Sheet: 1/1
	Date: 2026-09-09 Drawn By: andrkoryagin